DIAPHRAGM SEAL

DIRECT FLANGED INSERT TYPE

IPS-DS-08

SPECIAL FEATURES

- WELDED DIAPHRAGM
- MOST SUITABLE FOR SLURRY & CORROSIVE SERVICE
- FLUSHING RING, FLANGE & DIAPHRAGM ARE AVAILABLE IN VARIOUS TYPE OF SS & EXOTIC MATERIALS.

APPLICATIONS

DIAPHRAGM SEALS ARE PROVIDED IN THE INSTRUMENTS LIKE PRESSURE GAUGES, SWITCHES, TRANSMITTERS IN ORDER TO ISOLATE THE SENSING ELEMENT FROM THE MAIN SERVICE DUE TO ITS CORROSIVE, VISCOUS AND SEDIMENTED NATURE AND TO AVOID CLOGGING AND SOLIDIFICATION. THESE KIND OF SEALS ARE WIDELY USED IN THE VISCOUS & CORROSIVE SERVICES WHERE FLUSHING IS REQUIRED PERIODICALLY & FREQUENTLY.

SPECIFICATIONS

STANDARD VERSION_(FOR FLANGE SIZE 1½" AND ABOVE)

Seal Type	: S26 = -1 to 0 kg/cm² & 0 to 250 kg/cm² (Non PTFE Lined)*(Standard)
	: S27 = -1 to 0 kg/cm² & 0 to 40 kg/cm² (PTFE Lined)*
Process Temperature	: Max. 150 °C for PTFE lined
	: - 40 °C to 200 °C for without PTFE lined
Instrument Connection	: ½" BSP (F)
Process Connection	: Flange(As per DIN/BS/ANSI/JIS), 40 NB(11/2") & above
Fill Fluid	: Silicon Oil - DC 200
Flange Finish	: 125-250 AARH

* Range of selected instrument shall be suitable to flange pressure rating.

Diaphragm	: AISI 316L SS
Top Chamber	: AISI 304 SS
Flange	: AISI 316 SS

DIMENSIONS - STANDARD VERSION

SEAL TYPE : S26

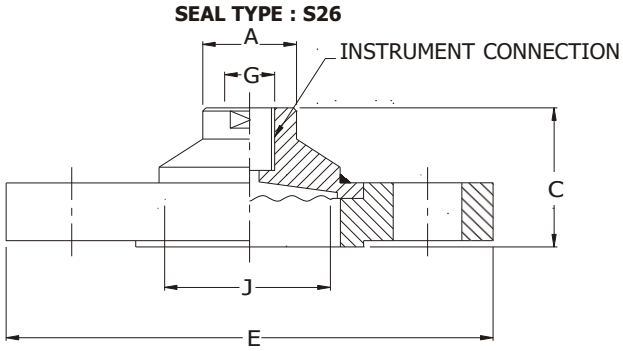

NON PTFE LINED

SEAL TYPE : S27

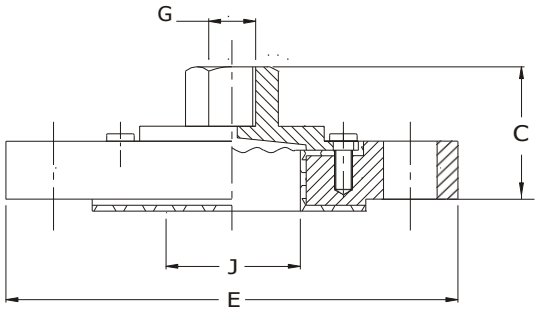

PTFE LINED

A	C	E	G	J
30	44.5	* *	½" BSP (F)	* * *

* * As per standard flange table ANSI, DIN, BS, JIS, Etc.,
* * * Diaphragm Dia. to suit Flange

Industrix Precise Solutions Private Limited
Room No – 303, Bhumika Residency, Plot No-21, Sector-20, Roadpali, Kalamboli, Panvel (Tal.), Raigad (Dist.), Maharashtra, India – 410218.
Mobile: +91 99309 98399 / +91 99674 97447
E-mail: admin@ipspl.in / sales@ipspl.in Website: www.ipspl.in
CIN : U52399MH2021PTC368555

FLANGE TABLE WITH ORDERING CODES

HOW TO SELECT

e.g. FOR FLANGE SIZE OF 1" AS PER BS-10 TABLE E WITH RAISED FACE : B97 - A2

A2 RAISED FACE
A3 FLAT FACE

Flange Finish shall be 125 - 250 AARH as a standard. For other finish, please consult factory.

AS PER DIN 2527

DN	PN	CODE
40	6	A41
	10	A42
	16	A43
	25	A44
	40	A45
	64	A46
	100	A47
	160	A48
	250	A49
	400	A50
50	6	A51
	10	A52
	16	A53
	25	A54
	40	A55
	64	A56
	100	A57
	160	A58
	250	A59
	400	A60

DN	PN	CODE
65	6	A61
	10	A62
	16	A63
	25	A64
	40	A65
	64	A66
	100	A67
	160	A68
	250	A69
	400	A70
80	6	A71
	10	A72
	16	A73
	25	A74
	40	A75
	64	A76
	100	A77
	160	A78
	250	A79
	400	A80

AS PER DIN 2642

DN	PN	CODE
40	10	A95
50		A96
65		A97
80		A98

AS PER DIN 2633

DN	PN	CODE
40	16	A86
50		A87
65		A88
80		A89

AS PER DIN 2635

DN	PN	CODE
40	40	B05
50		B06
65		B07
80		B08

AS PER JIS - B 2210

NOMINAL SIZE	RATING /CLASS	CODE
40A	5K	B72
	10K	B73
	40K	B74

NOMINAL SIZE	RATING /CLASS	CODE
50A	5K	B75
	10K	B76
	40K	B77
65A	5K	B78
	10K	B79
	40K	B80
80A	5K	B81
	10K	B82
	40K	B83

AS PER BS - 10

NOMINAL SIZE	TABLE	CODE
1½"	D	C09
	E	C10
	F	C11
	H	C12
	J	C13
	K	C14
2"	D	C15
	E	C16
	F	C17
	H	C18
	J	C19
	K	C20

NOMINAL SIZE	TABLE	CODE
2 ½"	D	C21
	E	C22
	F	C23
	H	C24
	J	C25
	K	C26
3"	D	C27
	E	C28
	F	C29
	H	C30
	J	C31
	K	C32

AS PER ANSI B 16.5

NOMINAL SIZE	RATING /CLASS	CODE
1 ½"	150	B33
	300	B34
	600	B35
	900	B36
	1500	B37
	2500	B38
2"	150	B39
	300	B40
	600	B41
	900	B42
	1500	B43
	2500	B44

NOMINAL SIZE	RATING /CLASS	CODE
2½"	150	B45
	300	B46
	600	B47
	900	B48
	1500	B49
	2500	B50
3"	150	B51
	300	B52
	600	B53
	900	B54
	1500	B55
	2500	B56

DIAPHRAGM SEAL

IPS-DS-08

HOW TO ORDER

	IPS-DS-08
BASIC MODEL	
CODE	
OPTIONAL EXTRAS	
[It is recommended that the MOC of Diaphragm & flange should be equivalent.]	
SEAL TYPE	
S26 -1 to 0 kg/cm² & 0 to 250 kg/cm² (Non PTFE Lined) (Standard)* **S27** -1 to 0 kg/cm² & 0 to 40 kg/cm² (PTFE Lined)*	XXX
* Range of selected instrument shall be suitable to flange pressure rating.	
INSTRUMENT CONNECTION	
VM ½" NPT (F) **VL** ½" BSP (F)(Standard) **VP** 3/8" BSP (F)	XX
TOP CHAMBER	
YA AISI 316L SS **YC** CARBON STEEL **XY** AISI 316 SS **XW** AISI 304 SS (Standard)	XX
DIAPHRAGM (* For seal type S27 & Pressure Range 16 kg/cm² Max.) (# Range up to 21 kg/cm²)	
UQ TANTALUM **UR** TITANIUM **UP** SILVER# **KE** PTFE* **UL** HASTELLOY 'C' **UM** MONEL **UJ** AISI 316L SS (Standard)	XX
FLANGE MATERIAL	
TK AISI 304 SS **TN** CARBON STEEL **UH** TITANIUM **TM** AISI 316 SS (Standard) **TL** AISI 316L SS **TX** MONEL **TT** HASTELLOY C **UD** TANTALUM	XX
PROCESS CONNECTION	
AS PER DIN / BS / ANSI / JIS (SELECT CODE FROM FLANGE TABLE)	XXX
PROTECTION ON WETTED PARTS	
VS PTFE LINING ON BOTTOM CHAMBER - 2 mm THICK (Max. Up to 150 °C) **VV** PTFE PROTECTION FOR DIAPHRAGM (Max. Up to 150 °C) (Suitable for Pressure Ranges only) **VZ** PTFE COATING ON DIAPHRAGM (Max. Up to 315 °C)	XX
FILLING FLUIDS (* Consult factory for specifications, price and delivery.)	
US FLUROLUBE 4.2 [-45 to 175 °C] **UY** SILICON DC 704 [10 to 337 °C] **UT** FLUROLUBE 6.3 [-40 to 235 °C] **UZ** SILICON DC 710 [7 to 371 °C] **UU** FLUROLUBE FS-5 [-28 to 148 °C] **VA** SYLTHERM 800 [-40 to 315 °C] **UV** FOOD GRADE OIL [-20 to 140 °C] **VB** SYLTHERM XLT [-100 to 260 °C] **UX** SILICON DC 200 [-40 to 205 °C] (Standard) **VC** HALOCARBON OIL*	XX
REMOTE MOUNTING (With capillary of Max. Up to 6 Mtrs.)	
SPECIFY IN METERS (e.g. 1.5 = 1.5 METERS 2.0 = 2 METERS)	3Mtr.
CAPILLARY	
PE AISI 304 SS **PG** AISI 316 SS	XX
CAPILLARY COVERED WITH ARMOUR (Applicable with PE or PG if selected)	
PF AISI 304 SS **PH** AISI 316 SS **PI** PVC (Ambient Temp. Max. 60°C)	XX
OPTIONS	
TB HELIUM LEAK TEST **TC** DRY SEAL ONLY WITHOUT INSTRUMENT **GH** MATERIAL TEST CERTIFICATES*	XX

* MATERIAL TEST CERTIFICATES WILL BE PROVIDED FOR WETTED PARTS ONLY WITH CHEMICAL COMPOSITION TESTING. FOR OTHERS, PLEASE CONSULT FACTORY.

Refer Datasheet EE for selection of Flushing Rings.

Note : Specifications and dimensions given in this product catalogue represents the state of engineering at the time of printing. Modifications may take place and materials specified may be replaced by others without prior notice.

Industrix Precise Solutions Private Limited

Room No – 303, Bhumika Residency, Plot No-21, Sector-20, Roadpali, Kalamboli, Panvel (Tal.), Raigad (Dist.), Maharashtra, India – 410218.

Mobile: +91 99309 98399 / +91 99674 97447

E-mail: admin@ipspl.in / sales@ipspl.in Website: www.ipspl.in

CIN : U52399MH2021PTC368555